350W Single Output with PFC Function

USP-350 series

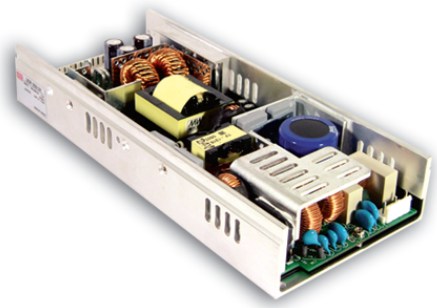

■ Features :

- Universal AC input / Full range
- Built in active PFC circuit compliance to EN61000-3-2
- Protections:Short circuit/Over load/Over voltage/Over temperature
- Free air convection for 300W
- High power density 5.6w/in^3
- Active AC surge current limiting
- U-bracket low profile:38mm
- 3 years warranty

SPECIFICATION

MODEL		USP-350-3.3	USP-350-5	USP-350-12	USP-350-15	USP-350-24	USP-350-48
OUTPUT	DC VOLTAGE	3.3V	5V	12V	15V	24V	48V
	RATED CURRENT	70A	70A	29.2A	23.4A	14.6A	7.3A
	CURRENT RANGE (convection)	0 ~ 50A	0 ~ 50A	0 ~ 25A	0 ~ 20A	0 ~ 12.5A	0 ~ 6.25A
	CURRENT RANGE (23.5CFM FAN)	0 ~ 70A	0 ~ 70A	0 ~ 29.2A	0 ~ 23.4A	0 ~ 14.6A	0 ~ 7.3A
	RATED POWER (convection)	165W	250W	300W	300W	300W	300W
	RATED POWER (18CFM FAN)	231W	350W	350.4W	351W	350.4W	350.4W
	RIPPLE & NOISE (max.) Note.2	80mVp-p	80mVp-p	100mVp-p	100mVp-p	150mVp-p	150mVp-p
	VOLTAGE ADJ. RANGE	2.97 ~ 3.6V	4.5 ~ 5.5V	10.8 ~ 13.2V	13.5 ~ 16.5V	21.6 ~ 26.4V	43.2 ~ 52.8V
	VOLTAGE TOLERANCE Note.3	±2.0%	±2.0%	±2.0%	±2.0%	±2.0%	±2.0%
	LINE REGULATION	±0.5%	±0.5%	±0.5%	±0.5%	±0.5%	±0.5%
	LOAD REGULATION	±2.0%	±2.0%	±1.0%	±1.0%	±1.0%	±1.0%
	SETUP, RISE TIME	2000ms, 100ms/230VAC 4000ms, 100ms/115VAC at full load					
	HOLD TIME (Typ.)	16ms/230VAC 16ms/115VAC at full load					
INPUT	VOLTAGE RANGE Note.5	90 ~ 264VAC 127 ~ 370VDC					
	FREQUENCY RANGE	47 ~ 63Hz					
	POWER FACTOR (Typ.)	0.94/230VAC	0.95/230VAC 0.98/115VAC at full load				
	EFFICIENCY (Typ.)	78%	84%	87%	86%	88%	89%
	AC CURRENT (Typ.)	3.8A/115VAC 1.9A/230VAC					
	INRUSH CURRENT (Typ.)	20A/115VAC 40A/230VAC					
	LEAKAGE CURRENT	<2mA / 240VAC					
PROTECTION	OVER LOAD	105 ~ 120% rated output power		105 ~ 130% rated output power			
		Protection type : Constant current limiting, recovers automatically after fault condition is removed					
	OVER VOLTAGE	3.7 ~ 4.6V	5.7 ~ 7V	13.5 ~ 16.3V	17 ~ 21V	26.7 ~ 32.4V	53 ~ 64.8V
		Protection type : Hiccup mode, recovers automatically after fault condition is removed					
	OVER TEMPERATURE	85℃±5℃(3.3V,5V,12V,15V,24V,48V) (TSW1 : Detect on heatsink of power transistor); 80℃±5℃(3.3V,5V,12V,15V) (TSW2 : Detect on heatsink of power diode)					
		Protection type : Shut down o/p voltage, re-power on to recover					
ENVIRONMENT	WORKING TEMP.	-10 ~ +65℃ (Refer to output load derating curve)					
	WORKING HUMIDITY	20 ~ 90% RH non-condensing					
	STORAGE TEMP., HUMIDITY	-40 ~ +85℃, 10 ~ 95% RH					
	TEMP. COEFFICIENT	±0.03%/℃ (0 ~ 45℃)					
	VIBRATION	10 ~ 500Hz, 2G 10min./1cycle, 60min. each along X, Y, Z axes					
SAFETY & EMC (Note 4)	SAFETY STANDARDS	UL60950-1, TUV EN60950-1 Approved					
	WITHSTAND VOLTAGE	I/P-O/P:3KVAC I/P-FG:1.5KVAC O/P-FG:0.5KVAC					
	ISOLATION RESISTANCE	I/P-O/P, I/P-FG, O/P-FG:100M Ohms/500VDC					
	EMI CONDUCTION & RADIATION	Compliance to EN55022 (CISPR22) Class B					
	HARMONIC CURRENT	Compliance to EN61000-3-2,-3					
	EMS IMMUNITY	Compliance to EN61000-4-2,3,4,5,6,8,11; ENV50204, Light industry level, criteria A					
OTHERS	MTBF	106.3K hrs min. MIL-HDBK-217F (25℃)					
	DIMENSION	235.2*101.5*38mm (L*W*H)					
	PACKING	1.1Kg; 16pcs/18Kg/0.72CUFT					

NOTE

1. All parameters NOT specially mentioned are measured at 230VAC input, rated load and 25℃ of ambient temperature.
2. Ripple & noise are measured at 20MHz of bandwidth by using a 12" twisted pair-wire terminated with a 0.1uf & 47uf parallel capacitor.
3. Tolerance : includes set up tolerance, line regulation and load regulation.
4. The power supply is considered a component which will be installed into a final equipment. The final equipment must be re-confirmed that it still meets EMC directives.
5. Derating may be needed under low input voltages. Please check the derating curve for more details.

■ Mechanical Specification

Case No. 941A-D Unit:mm

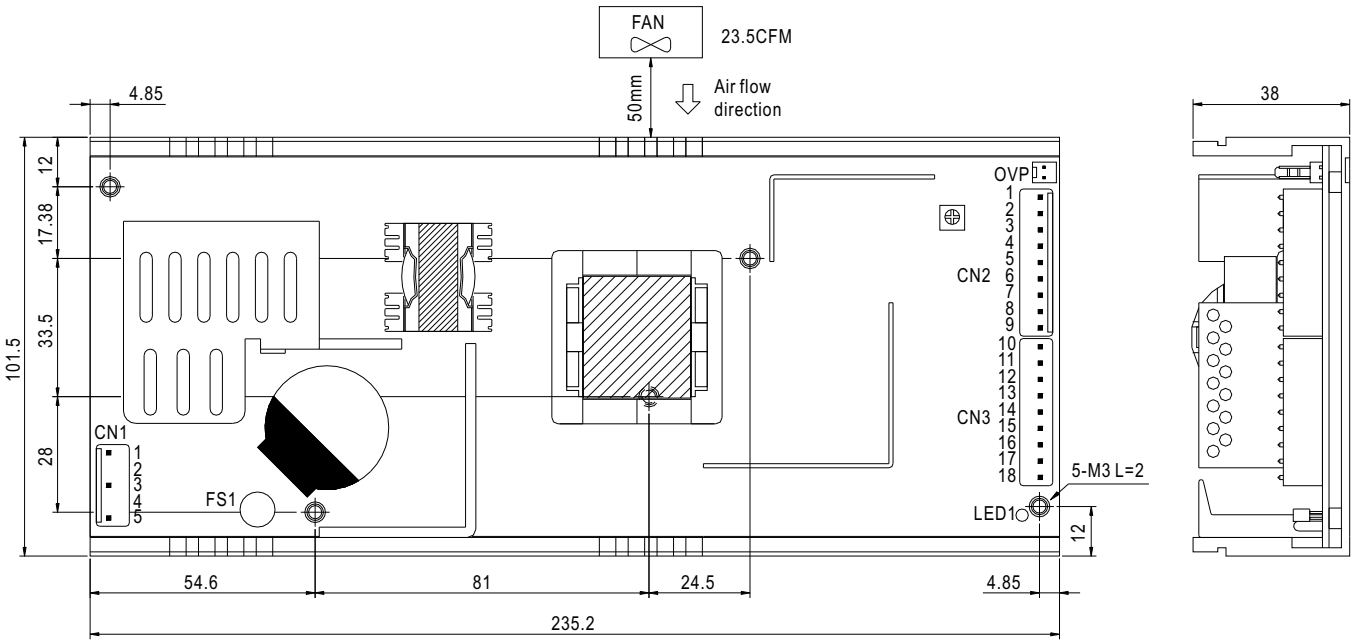

AC Input Connector (CN1) : JST B5P-VH or equivalent

Pin No.	Assignment	Mating Housing	Terminal
1	FG	JST VHR or equivalent	JST SVH-21T-P1.1 or equivalent
2,4	No Pin		
3	AC/N		
5	AC/L		

DC Output Connector (CN2,CN3) : JST B9P-VH*2 or equivalent

Pin No.	Assignment	Mating Housing	Terminal
1~9	-V	JST VHR or equivalent	JST SVH-21T-P1.1 or equivalent
10~18	+V		

■ Block Diagram

fosc : 100KHz

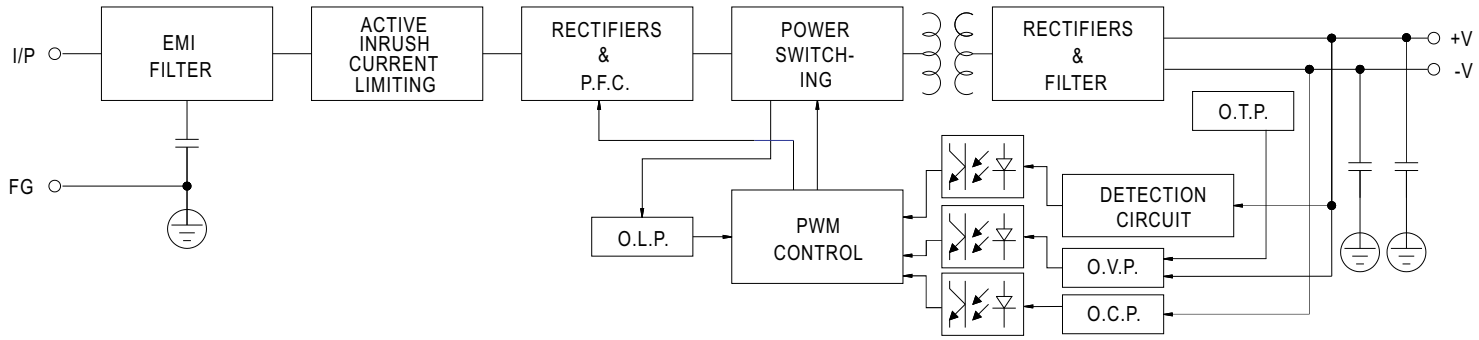

■ Derating Curve

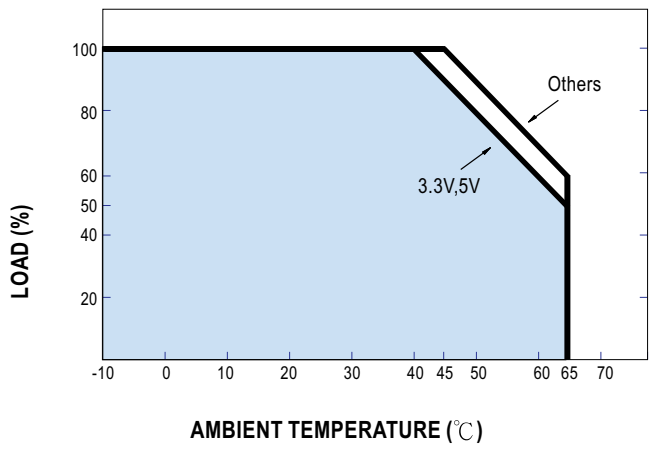
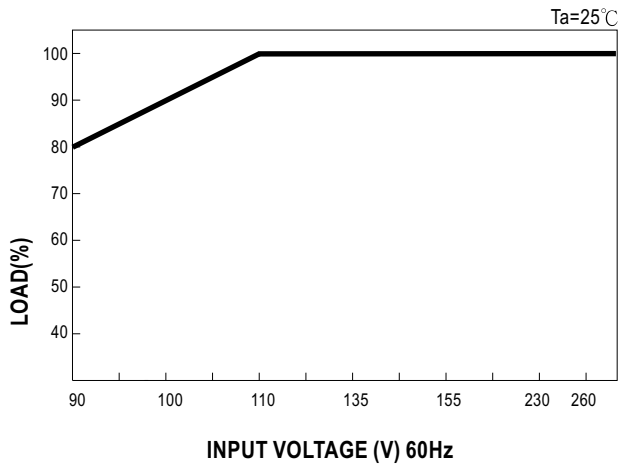
■ Static Characteristics (5V)