900~1200W Parallel Type With PFC Function

SCP-1K2 series

■ Features :

- AC 180~260VAC input
- PF>0.98@ 230VAC
- Protections: Short circuit/ Overload/ Over voltage/ Over temperature
- Built in remote sense function
- Built-in remote ON-OFF control
- Power good signal
- With parallel function(N+1)
- Can adjust from 20~100% output voltage by external control 1-5V
- Forced air cooling by built-in DC fan
- 3 years warranty

SPECIFICATION

ORDER NO.		SCP-1K2-05	SCP-1K2-09	SCP-1K2-12	SCP-1K2-15	SCP-1K2-18	SCP-1K2-24	SCP-1K2-36	SCP-1K2-48	SCP-1K2-60
OUTPUT	SAFETY MODEL NO.	1K2S-P005	1K2S-P009	1K2S-P012	1K2S-P015	1K2S-P018	1K2S-P024	1K2S-P036	1K2S-P048	1K2S-P060
	DC VOLTAGE	5V	9V	12V	15V	18V	24V	36V	48V	60V
	RATED CURRENT	200A	133A	100A	80A	66.6A	50A	33.3A	24A	20A
	CURRENT RANGE	0 ~ 200A	0 ~ 133A	0 ~ 100A	0 ~ 80A	0 ~ 66.6A	0 ~ 50A	0 ~ 33.3A	0 ~ 24A	0 ~ 20A
	RATED POWER	1000W	1200W	1200W	1200W	1200W	1200W	1200W	1152W	1200W
	RIPPLE & NOISE (max.) Note.2	100mVp-p	100mVp-p	120mVp-p	150mVp-p	180mVp-p	240mVp-p	360mVp-p	480mVp-p	500mVp-p
	VOLTAGE ADJ. RANGE	±3.0% Typical adjustment by potentiometer 20%~100% adjustment by 1~5VDC external control								
	VOLTAGE TOLERANCE Note.3	±2.0%	±1.5%	±1.0%	±1.0%	±1.0%	±1.0%	±1.0%	±1.0%	±1.0%
	LINE REGULATION	±0.5%	±0.5%	±0.5%	±0.5%	±0.5%	±0.5%	±0.5%	±0.5%	±0.5%
	LOAD REGULATION	±1.5%	±1.0%	±0.5%	±0.5%	±0.5%	±0.5%	±0.5%	±0.5%	±0.5%
	SETUP, RISE, HOLD TIME	500ms, 50ms, 16ms at full load								
INPUT	VOLTAGE RANGE	180 ~ 260VAC 260 ~ 370VDC see the derating curve								
	FREQUENCY RANGE	47 ~ 63Hz								
	POWER FACTOR	>0.98 / 230VAC								
	EFFICIENCY (Typ.)	80%	82%	84%	85%	86%	89%	89%	90%	90%
	AC CURRENT	10A / 230VAC								
	INRUSH CURRENT (max.)	60A / 230VAC								
	LEAKAGE CURRENT (max.)	3.5mA / 240VAC								
PROTECTION	OVER LOAD Note. 4	105 ~ 140% rated output power								
		Protection type : Current limiting, delay shut down o/p voltage, re-power on to recover								
	OVER VOLTAGE	110 ~ 135% Follow to output set up point								
		Protection type : Shut down o/p voltage, re-power on to recover								
	OVER TEMPERATURE	>100℃ / measure by heat sink, near transformer								
		Protection type : Shut down o/p voltage, recovers automatically after temperature goes down								
ENVIRONMENT	WORKING TEMP.	-20 ~ +65℃ (Refer to output load derating curve)								
	WORKING HUMIDITY	20 ~ 90% RH non-condensing								
	STORAGE TEMP., HUMIDITY	-20 ~ +85℃, 10 ~ 95% RH								
	TEMP. COEFFICIENT	±0.04% / ℃ (0 ~ 50℃)								
	VIBRATION	10 ~ 200Hz, 2G 10min./1cycle, 60min. each along X, Y, Z axes								
SAFETY & EMC (Note. 5)	SAFETY STANDARDS	UL60950, TUV EN60950-1 Approved								
	WITHSTAND VOLTAGE	I/P-O/P:3KVAC I/P-FG:1.5KVAC O/P-FG:0.5KVAC								
	ISOLATION RESISTANCE	I/P-O/P, I/P-FG, OP/FG:100M Ohms / 500VDC								
	EMI CONDUCTION & RADIATION	Compliance to EN55022 (CISPR22) class A								
	HARMONIC CURRENT	Compliance to EN61000-3-2,3								
	EMS IMMUNITY	Compliance to EN61000-4-2,3,4,5,6,8,11, Light industry level, criteria A								
OTHERS	POWER GOOD SIGNAL	Open collector of NPN transistor								
	SPECIAL FUNCTION	DC Voltage Adj., remote sensing, remote control, parallel operation(refer to control terminal instruction manual)								
	COOLING	By fan, >20% load or >50℃ fan on								
	MTBF	37.4K hrs min. MIL-HDBK-217F(25℃)								
	DIMENSION	290*120*132mm (L*W*H)								
	PACKING	4.5kg; 4pcs /19kg /CARTON								

NOTE

1. All parameters NOT specially mentioned are measured at 230VAC input, rated load and 25℃ of ambient temperature.
2. Ripple & noise are measured at 20MHz of bandwidth by using a 12" twisted pair-wire terminated with a 0.1uf & 47uf parallel capacitor.
3. Tolerance : includes set up tolerance, line regulation and load regulation.
4. Current limiting 3 times(1.5s,3.0s,5.0s)Then intelligent auto recovery before shut down
5. The power supply is considered a component which will be installed into a final equipment. The final equipment must be re-confirmed that it still meets EMC directives.

■ Mechanical Specification

Unit:mm

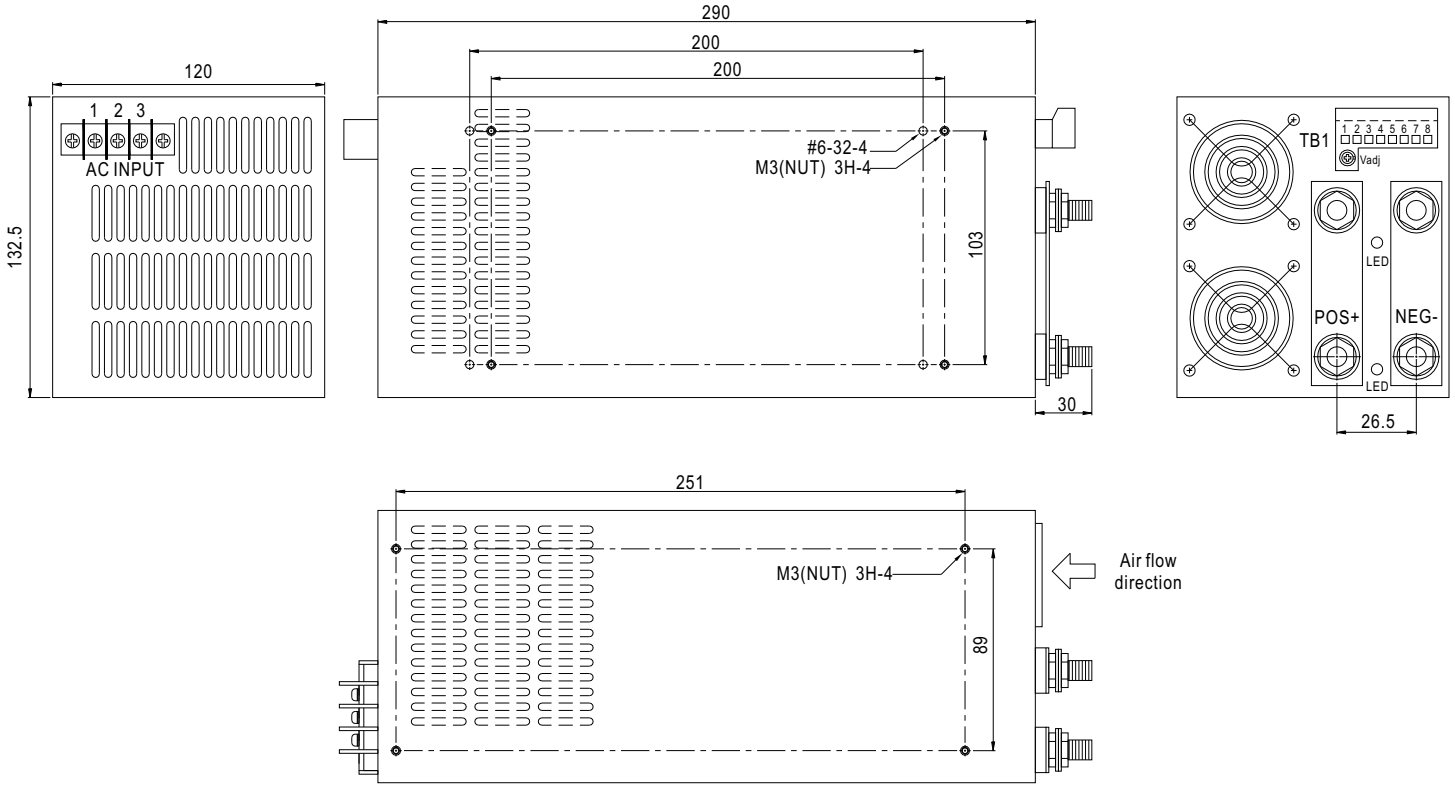

Terminal Pin. No. Assignment

Pin No.	Assignment
1	AC/L
2	AC/N
3	FG ⏚

Control terminal Pin. No. Assignment (TB1) : Dinkle 51HDBC-O8P or equivalent

Pin No.	Assignment	Pin No.	Assignment	Mating With
1	VS+	5	PG	Dinkle 51SDB-O8P or equivalent
2	VS-	6	PAR	
3	VCI	7	GND	
4	VCO	8	INH	

■ Derating Curve

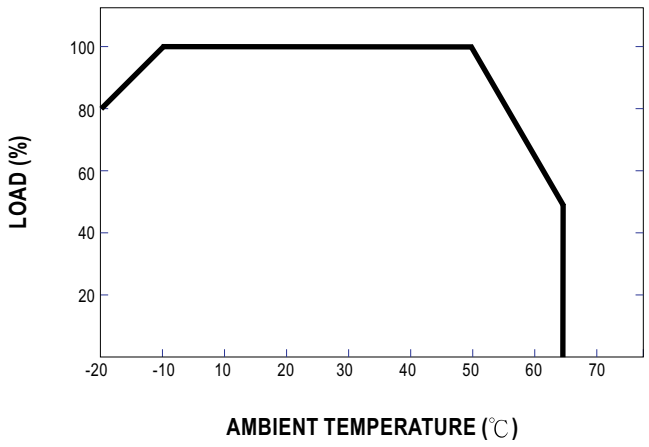

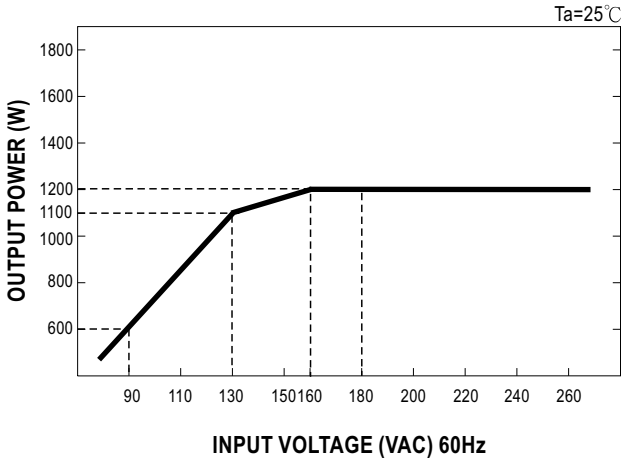

■ Control terminal instruction manual

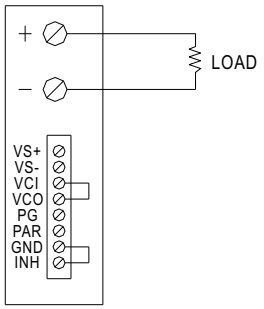

USING INTERNAL VOLTAGE CONTROL

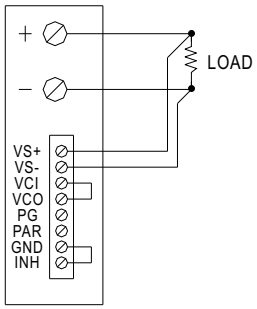

REMOTE SENSING

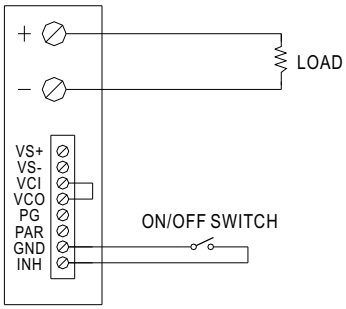

ON/OFF CONTROL BY SWITCH

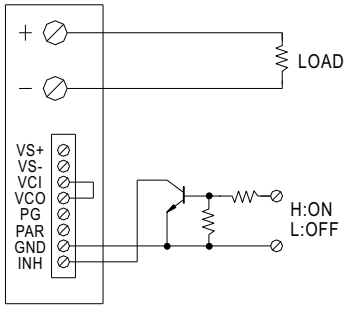

ON/OFF CONTROL BY TRANSISTOR

GOOD : LED OFF
FAIL : LED ON

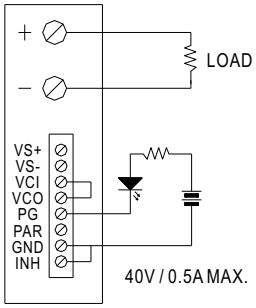

POWER GOOD SIGNAL

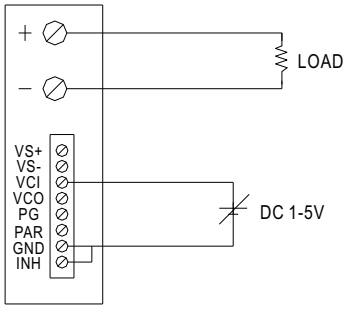

OUTPUT VOLTAGE ADJUST WITH DC 1-5V

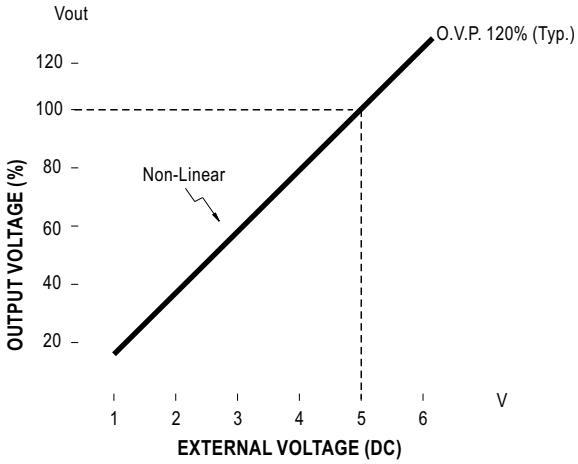

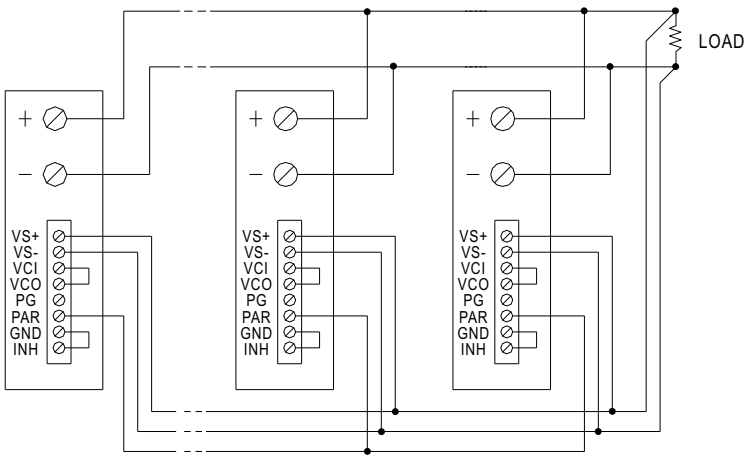

PARALLEL OPERATION WITH REMOTE SENSING

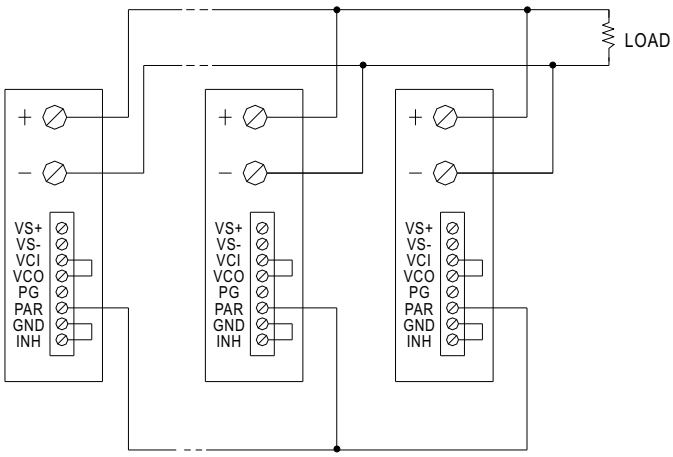

PARALLEL OPERATION WITHOUT REMOTE SENSING